MRX SERIES

HIGH PRESSURE TWO-SCREW PUMPS STANDARD PRODUCT SPECIFICATIONS

Enhanced Oil Recovery

A multiphase system reduces wellhead pressure enabling increased production and boosts the full well stream mixture of oil, water and gas from the battery to a central production facility and is ideally suited for new and mature fields.

The heart of the system is the multiphase pump that has to be capable of handling the wide range of liquids and gas as well as the transient conditions in terms of pressures and temperatures. The CIRCOR MRX Series multiphase pumps are robust machines that are manufactured under our rigorous standards and QC procedure and are fully tested in house before being integrated into our complete systems.

The MRX series pumps are suitable for handling between 0 to 100% gas and are ideal for high capacity production and transportation applications in the Oil & Gas market. In addition to the following materials, the pumps are available to meet NACE requirements and Super Duplex.

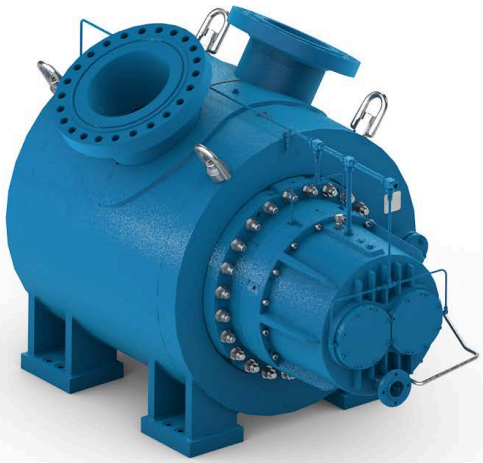

PRODUCT SPECIFICATIONS AND FEATURES	
Casing & End Covers	Fabricated Steel, ASTM A516 – Gr 55LCB
Rotors & Shafts	Forged Stainless, ASTM A276-986 431
Replaceable Liner	Cast Iron, ASTM A-48 or Ductile Iron, ASTM A536
Mechanical Seals	Double, API-682 Type
Seal Flush Plans	API-54
Flow Rates Range	Up to 630,000 bpd (up to 4,175 m3hr)
Inlet/Outlet Pressure	Up to 1,450 psig (100 bar G)
Differential Pressure	Up to 580psig (40 bar G)
Viscosity	1 to 5,000 cSt
Temperature	40 to 300°F (5 to 150°C)
Speed Range	350 to 2000 RPM
Drive & Rotation	Direct Coupled, CW Facing Driveshaft
Mounting	Horizontal
Suction Flange	600# ANSI RF, ANSI B16.5
Discharge Flange	600# ANSI RF, ANSI B16.5
Drain Connections:	600# ANSI RF, ANSI B16.5

Two-Screw Multiphase Pumping System

MPP Quick Selection Table - 1800 rpm; Pump Performance (suitable for parallel & series operation)

Model	Theoretical Flow Rate (m3/h)	Theoretical Flow Rate (bpd)	Differential Pressure (Bar)	Differential Pressure (psi)	Max Temperature	GVF %	Viscosity Range
MRX 150	260	39,000	40	580	300F / 150C	0 - 100%	1 - 5,000 cst
MRX 200	500	75,000	40	580	300F / 150C	0 - 100%	1 - 5,000 cst
MRX 250	1,500	225,000	40	580	300F / 150C	0 - 100%	1 - 5,000 cst
MRX 350	2,000	300,000	40	580	300F / 150C	0 - 100%	1 - 5,000 cst
MRX 400	4,175	630,000	40	580	300F / 150C	0 - 100%	1 - 5,000 cst

Typical Dimensions - MRX 400

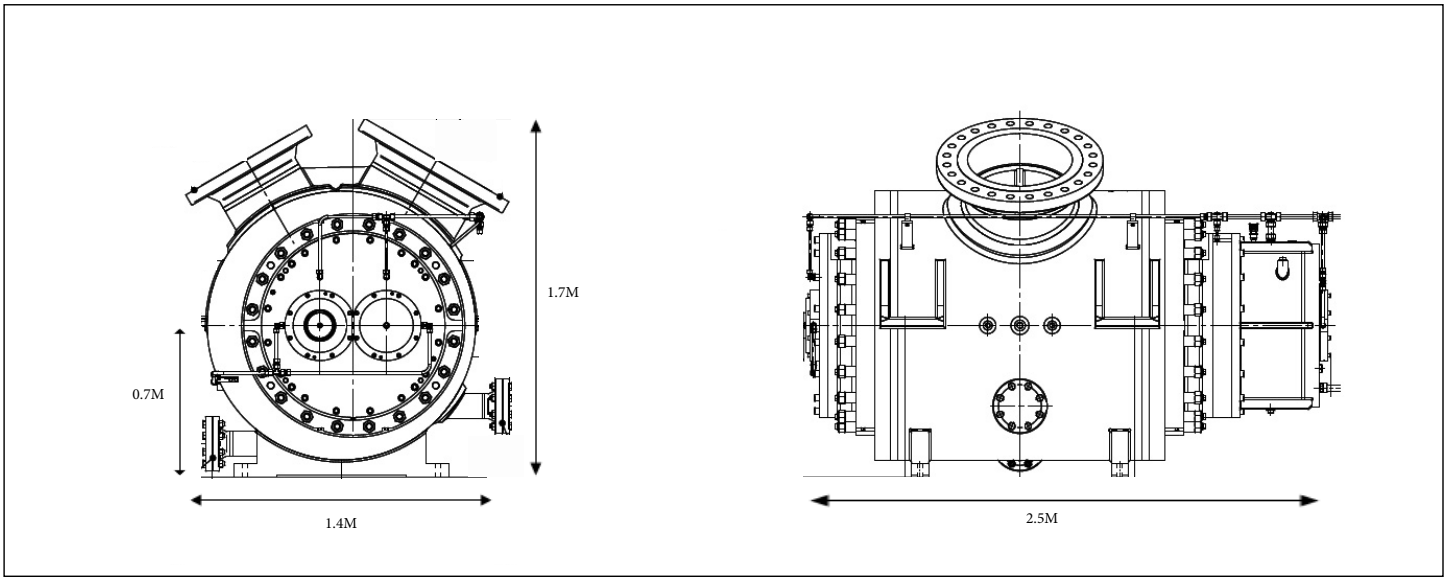

CIRCOR
1710 Airport Road
Monroe, NC 28110-5020
Tel: +1.704.289.6511
Tol: +1.877.853.7867

Oil & Gas Products & Services

ALLWEILER® HOUTTUIN™ IMO® ROSSCOR® WARREN®

CIRCOR, ALLWEILER, HOUTTUIN, IMO, ROSSCOR, and WARREN are registered trademarks of the CIRCOR or its subsidiaries in the U.S. and/or other countries. © 2018 CIRCOR International. All rights reserved.
GB-OG013-MRX-03/16 Rev. 1 03/18