

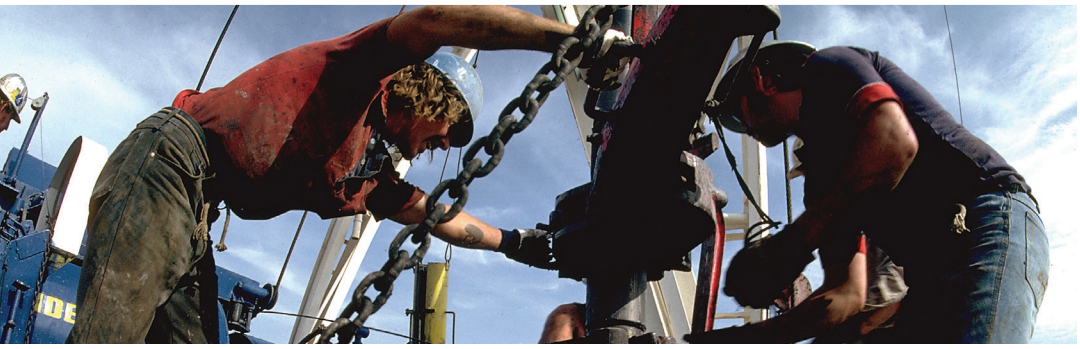



OIL & GAS

GLOBAL SOLUTIONS

CIRCOR

ALLWEILER® HOUTTUIN™
IMO® ROSSCOR® WARREN®



REDEFINING WHAT'S POSSIBLE

In your world, getting things done requires having the right resources in place – people you can count on, products you need and service when you need it. That's why we're building our business around the same things that drive yours.

At CIRCOR, you get more than just another product off the shelf. You get 150 years of application experience, technology that's relied on to move more than 4.5 million barrels of oil every day worldwide and a team of product and service specialists tasked with maximizing the uptime and efficiency of your operation – from upstream process to downstream refining.

PEOPLE YOU CAN COUNT ON FROM START TO FINISH

When you choose CIRCOR, you get passionate experts working for you – and with you. From upfront guidance, collaboration and engineering to post-production testing and training, we've redefined the industry standard for project success.





A REDEFINED APPROACH TO PROJECT SUCCESS

NINE ELEMENTS WORKING TOGETHER TO EXCEED YOUR EXPECTATIONS

1. PROJECT REVIEW – Application experts collaborate with you with the knowledge and experience necessary to deliver the right answers for your specific challenges.
2. PROJECT MANAGEMENT – The engine that makes things go, your project manager is assigned to keep things on track all the way through your project.
3. QUALITY CONTROL ASSURANCE – Your quality control experts help ensure quality not just at the production stage but from procurement through design, manufacturing and delivery.
4. ENGINEERING EXPERTS – Providing the engineering resources you can't afford to spare, CIRCOR oil and gas engineers turn ideas into reality. Complex computer modeling helps ensure the solution you need matches your exact performance specifications.
5. MANUFACTURING – Our global facilities use state-of-the-art production equipment to build to exacting specifications in the location that best suits your needs.
6. TESTING AND VERIFICATION – Courtesy of our 6,000-square-foot, 4,500 hp/3,310 kw test facility, your products and systems can be proven before they reach your final location.
7. LOGISTICS CONTROL– Whether across the country, across your continent or around the world, we help to ensure your equipment arrives safely and efficiently when promised.
8. EDUCATION AND TRAINING – Get the knowledge and confidence you need to pull the very most from your equipment. We have educated and trained more than 4,000 industry professionals like you and your team in over 20 different countries.
9. POST-INSTALL SUPPORT – The support you need extends well beyond installation. We help keep you up and running with service facilities in 23 countries with 24/7 technical assistance.

PRODUCTS YOU NEED WHEN AND WHERE YOU NEED THEM

Whether in the jungles of Colombia, the deserts of the Sahara or the icy waters of the polar circle, you can depend on CIRCOR to meet your oil and gas needs. Our global presence and industry-leading product application experience ensure you get the right answer whether you produce, transport, store or refine. And because you're working with a unique company that knows where the fluid comes from and where it needs to go, you can always count on maximum efficiency, reliability, output and uptime.

CIRCOR has worked with customers around the world to match or meet product performance requirements to published standards. Examples include API 676, API 614, API 682 and NACE. Our product portfolio focuses on positive displacement pump technology and extends to multiphase, lubrication and gas compression systems.

P Production T Transportation S Storage R Refining



THREE-SCREW PUMPS

P T S R

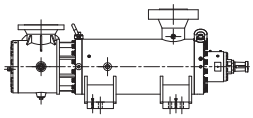

Flow rates up to 2,500 gpm (568 m³/h)

Pressure up to 2,000 psi (142 bar)

Maximum temperature up to 225° F (107° C)

TWO-SCREW PUMPS

P T S R

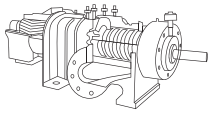

Flow rates up to 24,500 gpm (5,550 m³/h)

Differential pressure up to 1,400 psi (100 bar)

Maximum temperature 750° F (398° C)

EXTERNAL GEAR

T

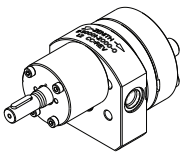

Flow rates up to 9 gpm (2 m³/h)

Differential pressure 2,500 psi (170 bar)

Max fluid temperature 950° F (510° C)

PROGRESSING CAVITY

P T S R

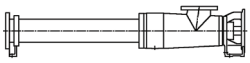

Flow rates up to 1,980 gpm (450 m³/h)

Differential pressure 580 psi (40 bar)

Max fluid temperature 300° F (150° C)

LUBRICATION SYSTEMS

R

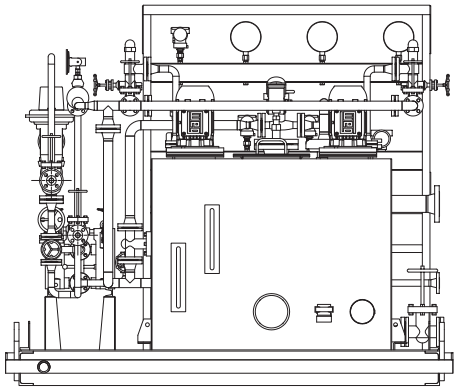

API 614 Chapter 2
Special Purpose

API 614 Chapter 3
General Purpose



COMPRESSOR PACKAGES P

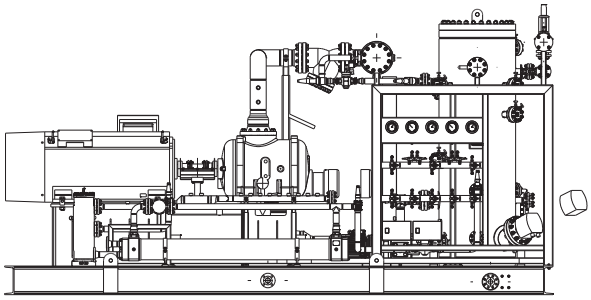

Howden Compressors Ltd. approved OEM packager for over 50 years

Packages cover a range from 300–14,000 m^3/h

Installed motor power up to 3.5 MW

API 619

API Plan 52, 53 and 72 seal systems

MULTIPHASE SYSTEMS P

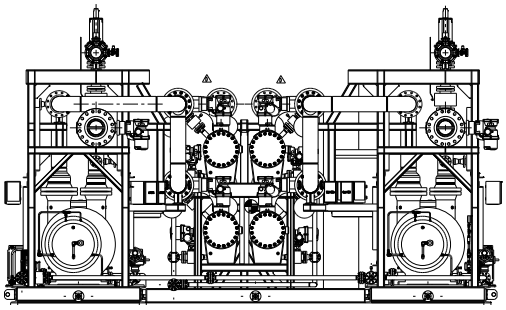

Self-priming, double entry, horizontal pump types

Pump flow rates from 132–6,737 gpm (30–1,530 m^3/h)

Differential pressure ratio 14–350 psi (1–25 bar)

Casing pressure 728–1,400 psi (52–100 bar)



PRODUCTION

TAKING OIL PROCESSING TO THE EXTREME

Our oil production systems are designed for superior safety and reliability so you can focus on what matters most – running your operations with maximum output. Whatever your challenge – water or land, remote locations, limited operators and extreme climates – CIRCOR specialists can customize a result that fits.

	Progressing cavity	Two-screw	Three-screw	Engineered systems
Field Gathering Pumps	X	X	X	
Heater Treater Charge Pumps	X	X	X	
Free Water Knockout Pumps	X	X		
Desalter Bottoms Pumps	X	X		
Multiphase Pumps	X	X		
Multiphase Systems				X
Gas Compression Systems				X
Water Injection Systems				X

REDEFINING ENDURANCE

PROJECT:

Vankor, Russia Oilfield



CHALLENGE:

Compress natural gas the equivalent of powering 197,000 households in the Netherlands for an entire year while enduring temperatures reaching – 50° C.

SOLUTION:

CIRCOR developed three of the world's largest oil injected screw compressors that can withstand extreme temperatures while producing enough natural gas to keep 20 of the world's largest gas engines running.



TRANSPORTATION



FROM PIPELINE TO STORAGE AND EVERYTHING IN BETWEEN

Transport crude oil from production to refineries more effectively with CIRCOR pipeline solutions. We make this challenging, round-the-clock exercise straightforward and reliable by delivering the know-how and products for all your transport applications – crude oil pipelines, rail car loading and unloading facilities, marine barges and FPSO vessels.

	Progressing cavity	Two-screw	Three-screw	Gear
Suction Booster Pumps	X	X	X	
Mainline Shipping Pumps		X	X	
Pipeline Re-injection Pumps		X	X	
Scraper Trap Pumps			X	X
Chemical Injection Pumps				X

REDEFINING DISTANCE

PROJECT:

Colombia Pipeline



CHALLENGE:

Pump 300,000 barrels of heavy crude oil through the jungles of Colombia and over 5,000-foot peaks in the Andes Mountains.

SOLUTION:

CIRCOR engineers designed a super-powered system featuring a sequence of two-screw pumps that feed into numerous three-screw pumps. To produce the massive flow rate necessary, they added a line of high-capacity 8L Series pumps that run parallel.



STORAGE

THE UPSIDE OF MIDSTREAM PROCESSING

Move fluids with speed and precision by having the right people and technology in place. Backed by a team of knowledgeable specialists, CIRCOR terminal station solutions ensure efficiency flows downstream, whether you're charged with loading and unloading fluids or storing, redistributing and consolidating them.

	Progressing cavity	Two-screw	Three-screw
Tank Loading & Unloading Pumps	X	X	X
Tank Blending Pumps	X	X	X
Tank Heater Circulation Pumps	X	X	
Bitumen & Asphalt Transfer Pumps		X	X
Shipping Pumps		X	X

REDEFINING SPEED

PROJECT:

Jurong Island Crude Carrier



CHALLENGE:

Load millions of barrels of oil onto very large crude carriers in the heart of Singapore's energy and chemicals industry.

SOLUTION:

CIRCOR designed two-screw rotary positive displacement pumps with capacity of 5,000 cubic meters per hour that get the job done in less than eight hours.

REFINING

SETTING THE STANDARD FOR ENERGY-SAVING AND ENVIRONMENTAL SAFETY

Manage your complex, energy-demanding processes safely and efficiently. Your CIRCOR application team helps you navigate this world by providing a solution that meets stringent environmental regulations and is proven in major oil refining areas around the globe.



	Progressing cavity	Two-screw	Three-screw	Engineered systems
Process Charge Pumps		X	X	
Residuum & Vacuum Bottoms Pumps		X		
De-asphalting Pumps		X	X	
Tank Loading Pumps		X	X	
Waste & Slop Oil Pumps	X	X		
API 614 Lubrication Systems				X
API 682/610 Seal Oil Systems				X



REDEFINING OPERATING CONDITIONS

PROJECT:

Oil Refinery in Saudi Arabia



CHALLENGE:

Engineer and design a series of lubrication systems to help one of Saudi Arabia's most relied upon oil refineries maintain its daily production quota of 400,000 barrels of oil.

SOLUTION:

CIRCOR successfully designed four core systems and ultimately built 52 lubrication skids that could withstand the continuous operation in what was a highly demanding and high-temperature environment.



SERVICE YOU'LL APPRECIATE EVERY STEP OF THE WAY

You want to be more efficient and we can help. Take advantage of our state-of-the-art tools and expertise to optimize system performance and energy savings while ensuring your team has the knowledge and training it needs.

TESTING – You can be confident your CIRCOR products and systems meet the specified design standards. Courtesy of our 6,000 square-foot, 4,500 hp/3,310 kw test facility, we validate product performance up to 11,000 gpm (2,500 m^3/hr) with maximum outlet pressure of 2,500 psig (172 bar).

EFFICIENCY GUIDANCE – Identify new ways to reduce your total cost of operation with our exclusive Energy Savings Calculator. Go to www.circorpt.com/oil-gas, click on Get Started Now and complete a head-to-head comparison between centrifugal pumps and rotary positive displacement pumps in both single and multi-pump applications. You provide the variables and this robust tool will do the rest.

TRAINING – Take advantage of local or on-site education and training opportunities available from CIRCOR. Learn to successfully manage your oil and gas operation from experts who have educated more than 4,000 professionals in 20 countries on the benefits of positive displacement technology and system optimization.

AFTERMARKET SUPPORT – Once your new CIRCOR product or system is up and running, our support team helps you keep it that way. With parts and service facilities around the globe, you can expect fast, reliable support no matter what you need or where you are. And because our technicians are available 24/7, you also can get that support whenever you need it.



CIRCOR is a market-leading, global provider of integrated flow control solutions, specializing in the manufacture of highly engineered valves, instrumentation, pumps, pipeline products and services, and associated products, for critical and sever service applications in the oil and gas, power generation, industrial, process, maritime, aerospace, and defense industries.

Excellence in Flow Control

Asia | Europe | Middle East | North America | South America

SES International B.V.
Sluisstraat 12 Delden,
NL-7491GA Netherlands
+31 74 377 7300

CIRCOR
1710 Airport Rd
Monroe, NC 28110
USA

Warren Pumps LLC
82 Bridges Avenue
P.O. Box 969
Warren, MA 01083-0969
USA
+1(413) 436-7711

Allweiler India Pvt. Ltd.
CIRCOR
Plot No. 1, 22, 23, 653/1,
Somnath Co-op.
Indl. Soc. Ltd.,
Somnath-Kachigam Road,
Daman, 396 210. India

CIRCOR | ALLWEILER® HOUTTUIN™ IMO® ROSSCOR® WARREN®

circorpt.com/oil-gas

CIRCOR, ALLWEILER, IMO, ROSSCOR and WARREN are registered trademarks and HOUTTUIN is a trademark of CIROCOR International or its subsidiaries in the U.S. and/or other countries. ©2018, CIRCOR International. All rights reserved. GB-OG001-022991-3/18