

ALLMARINE®: Complete Solutions from One Source

Pump equipment designed and constructed for use in Marine and Offshore engineering.

- A wide range of screw pumps, centrifugal pumps, progressing cavity pumps and propeller pumps
- The best pump for every application
- Special materials with high resistance to salt water corrosion
- All the pumps in the engine room from the same manufacturer
- Special solutions like trim and fire-fighting pumps

ALLWEILER

A Colfax Business Unit



Many countries use ALLMARINE® pumps in their naval ships, and such pumps need to meet the very high requirements set. Subjected to shock and vibration tests, they are also tested for low noise emission and high electromagnetic tolerance. The merchant navy automatically profits from these high quality standards and at no extra cost.

ALLMARINE® pumps consist largely of standardised parts. This gives the owner savings for spare parts due to

- ▶low inventory,
- ▶reduced storage space,
- ▶rapid and economical delivery.

ALLMARINE®:

All Pumps from One Source

The ALLMARINE® product family contains the optimal pump for every requirement in Marine and Offshore engineering.

When you're looking for complete Marine and Offshore pump packages especially for naval and merchant navy use talk to the European market leader, ALLWEILER AG. Internationally, ALLWEILER AG is one of the three major international manufacturers of marine pumps. Your pumps benefit from the decades of experience that ALLWEILER AG has gained from being a market leader in merchant shipbuilding and the navy.

For every size and type of ship

Our own production contains pump units and complete pump packages for virtually every application. This includes everything from fishing trawlers to supertankers.

Service and support guaranteed

When you choose an ALLMARINE® pump, you can expect rapid on-site service anywhere in the world. Global service and support centres ensure that customers have access to qualified maintenance for any pump unit whenever necessary.

The QuickServe® program guarantees that common wearing parts will be shipped anywhere in the world within certain reaction times. Depending on the pump, ALLWEILER will deliver complete repair kits or individual parts. Repair kits contain all necessary gaskets and other wearing parts. The parts are sent to the exact location at the exact time specified. For example, an order that comes directly from a ship at sea may be delivered to the ship's next port of call. They are delivered with an open invoice and with all necessary paperwork, so you get your parts without jumping over bureaucratic hurdles.

Special materials

Ship pump materials must withstand high flow speeds, endure longer periods of stoppage in sea water without problems, and simultaneously offer resistance to cavitation. ALLWEILER pumps reliably meet these special requirements. One result of our decades of experience is that all marine pumps that contact sea water are produced from nickel-aluminum-bronze exclusively. This material presents the foundry with special challenges. It has the best characteristics for marine applications. The know-how and expertise that ALLWEILER gains from having its own foundry is your guarantee that your pumps are produced with uniformly high-quality material CC333G (G-CuAl10Ni).

Maximum performance specification of ALLWEILER Marine and Offshore pumps*

	Centrifugal Pumps	Screw Pumps	Progressing Cavity Pumps	Propeller Pumps
Q	2,400 m^3/h	7,500 l/min	4,850 l/min	1,300 m^3/h
p_d	25 bar	120 bar	24 bar	2.5 bar
t	350 °C	250 °C	150 °C	40 °C
H	250 m	-	-	20 m
ν	-	60,000 mm^2/s	270,000 mm^2/s	-

*** All specifications listed here and in the following tables are for 60 Hz operation.**

COMPLETE



Over 100 years of quality casting in our own foundry guarantee you high quality materials for marine pumps, virtually all of which you can get exclusively from ALLWEILER. One example is aluminum multi-alloy bronze, a highly sea water resistant material.

ALLWEILER is certified according to DIN EN ISO 9001:2000. All marine pumps are produced in accordance with classification guidelines and are used by national navies around the world.

ALLMARINE® pumps are designed to reliably provide the following characteristics:

- ▶High Mean Time Between Failure (MTBF)
- ▶Short Mean Time to Repair (MTTR)
- ▶High Availability, Reliability and Maintainability (ARM)

ALLMARINE®:

Optimum Marine and Offshore Pumps

The variety of pumping principles used in ALLMARINE pumps ensures that you will always have exactly the right type of pump for moving the corresponding liquid in the best way possible and with the lowest life cycle costs.

Service	Pump type					
	Three Screw Pumps	Two Screw Pumps	Centrifugal Pumps	Propeller Pumps	Progressing Cavity Pumps	Side Channel Pumps
Anti-heeling pump				●		
Ballast pump			●			
Bilge pump			●		●	
Boiler circulation pump			●			
Boiler feed water pumps			●			●
Cargo pump	●	●	●			
Crosshead lube-oil pump	●					
Cylinder oil transfer pump	●					
Fire-fighting pump			●			
Fresh water cooling pump			●			
Fuel pump (light/heavy oil, diesel oil)	●					
General Service pump			●			
Heavy oil feeder pump for separator	●					
Heavy oil preliminary pressure pump	●					
Heat transfer pump			●			
Hydraulic pump	●					
Hydrophor pump			●			
Lube oil circulation pump	●	●	●			
Potable water pump			●			
Sea water cooling pump			●			
Sludge pumpe					●	
Stern tube lube-oil pump	●					
Stripping pump		●				
Winch pump	●					

SPECIFIC

ALLMARINE® MI/MA: High Quality Materials and Gre

ALLMARINE® MI/MA combines outstanding efficiency and NPSH values with h

Your benefits:

▶Can be replaced reliably and quickly

Driven by standardised motors.

Your benefits:

▶Compact

Light, low centre of gravity, small installed size.

ALLMARINE MA

Your benefits:

▶Long service life

Materials that are proven in every relevant field of application: Ductile iron EN-GJS-400-15 and aluminum multi-alloy bronze CC333G for housing and impeller; shaft made from corrosion-resistant stainless steel.

Your benefits:

▶Efficiency

High efficiency and low NPSH values with hydraulics that are specially designed and optimised for use in ships.

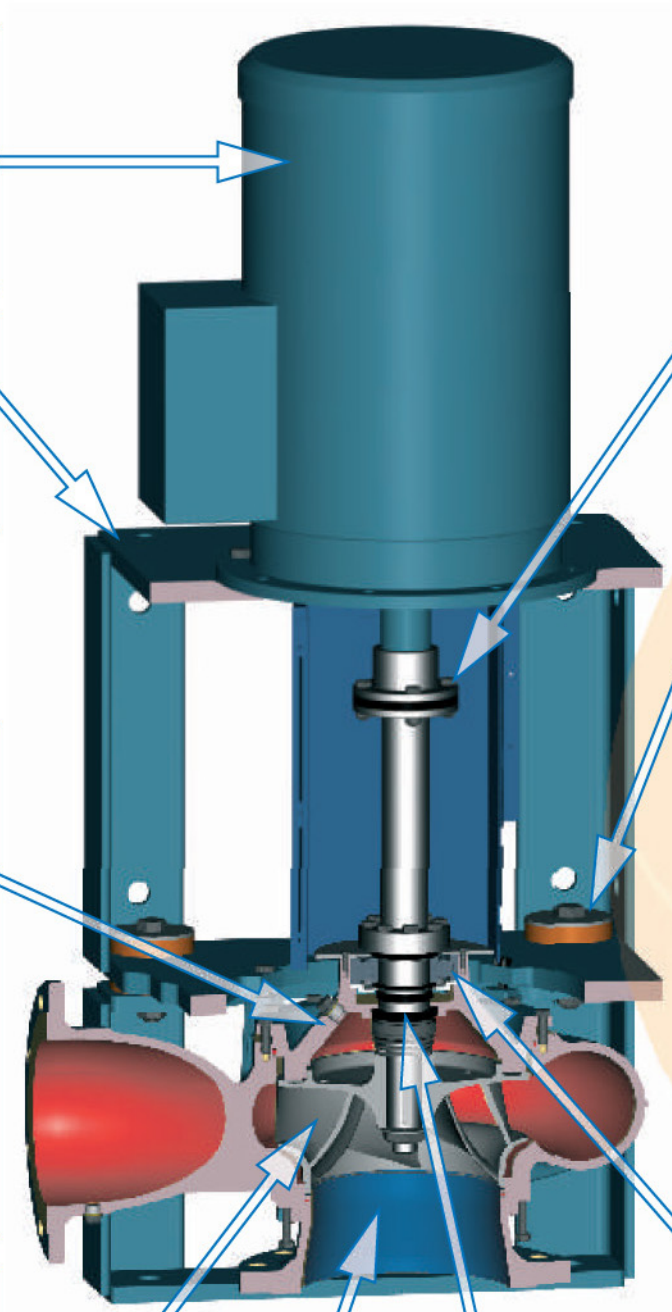

Your benefits:

▶Flexibility

Rotatable suction branch on inline version.

Your benefits:

▶Easy maintenance

Low maintenance mechanical seal with own internal flushing.

Your benefits:

▶No maintenance and rapid assembly

Corrosion resistant all-steel multiple disc clutch; simple assembly/disassembly of the insert unit with impeller.

Your benefits:

▶Cost savings

Using elastic compensators to connect the bracket with the pump foot reduces weight, noise, and oscillation. The split bracket design is also easier to install, exhibits greater tolerance for an uneven foundation, and is able to compensate against external forces. Overall, these characteristics reduce loads and increase the pump's service life.

Your benefits:

▶Low maintenance

Permanently lubricated, robust groove ball bearings sealed on both sides against sprayed water.

ater Efficiency

igh tolerance for twisting.

Applications:
Ballast pump, bilge draining, fire fighting pump, cooling water feed, general service.

ALLMARINE® MI/MA pumps ensure high availability (MTBF) and low life cycle costs. Choose from two versions of ALLMARINE® MI/MA:

▶MI series in inline version

▶MA series with axial inlet and radial outlet

Both series are available for pedestal and wall mounting.

▶Flow optimisation for high efficiency

The impeller and pump housing are optimised with numerical CFD calculation methods to achieve the best possible flow. As a result, the inline version has equally low NPSH values as the axial version. In addition, the optimised suction casing ensures that the pump's low cavitation tendency and low NPSH values are preserved across a wide range of flow rates and even when the pump is overloaded.

High efficiency enables use of smaller motors that consume less energy so you save money, weight, and space without sacrificing pumping performance.

▶Mass optimisation means light and robust pumps

FEM calculations ensure that all components are optimised for weight and pressure. Material thicknesses are precisely adapted to the corresponding pressure loads. Pumps optimised in this way combine lowest possible weight with the highest safety.

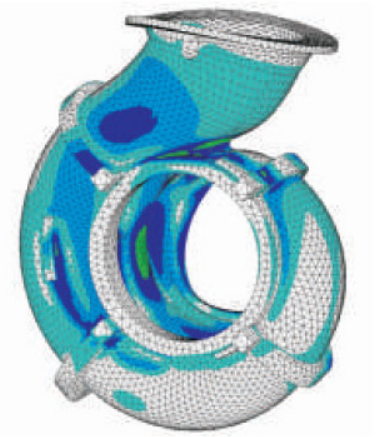

▶Simultaneously stable and flexible

Bracket, pump foot and elastic compensators are calculated and checked as a unit under realistic operational conditions. The split bracket exhibits significant advantages. Sub-critical operation based on structural resonance frequencies is easier to attain, passive and active oscillation insulation is higher, noise insulation stronger and oscillation damping more effective. In addition to quieter operation, this results in lower stress on the pump and pipe connections to extend the pump's service life and reduce costs. The split bracket saves you cash.

Performance data of ALLMARINE® MI/MA

	Standard product line	On request
Q	up to 1,800 m^3/h	up to 1,800 m^3/h
H	up to 65 m	up to 140 m
p_d	up to 10 bar	up to 25 bar
t	sea water up to 40 °C, fresh water up to 100 °C	
Nominal widths	Suction branch 125 to 400 mm, discharge flange 65 to 350 mm	

TECHNOLOGY

ALLMARINE® NIM/NAM: Built for Easy Maintenance a

Process design makes these pumps reliable and easy to maintain.

Your benefits:

▶Easy maintenance

Process design permits faster removal of the insert unit, including impeller, without disassembling pump casing and drive motor.

Your benefits:

▶Reliability and low maintenance

Robust bearing with two permanently grease-lubricated groove ball bearings specially protected by a V-ring.

Your benefits:

▶Safety

With a non-cooled, un-balanced, low-maintenance mechanical seal.

ALLMARINE NIM

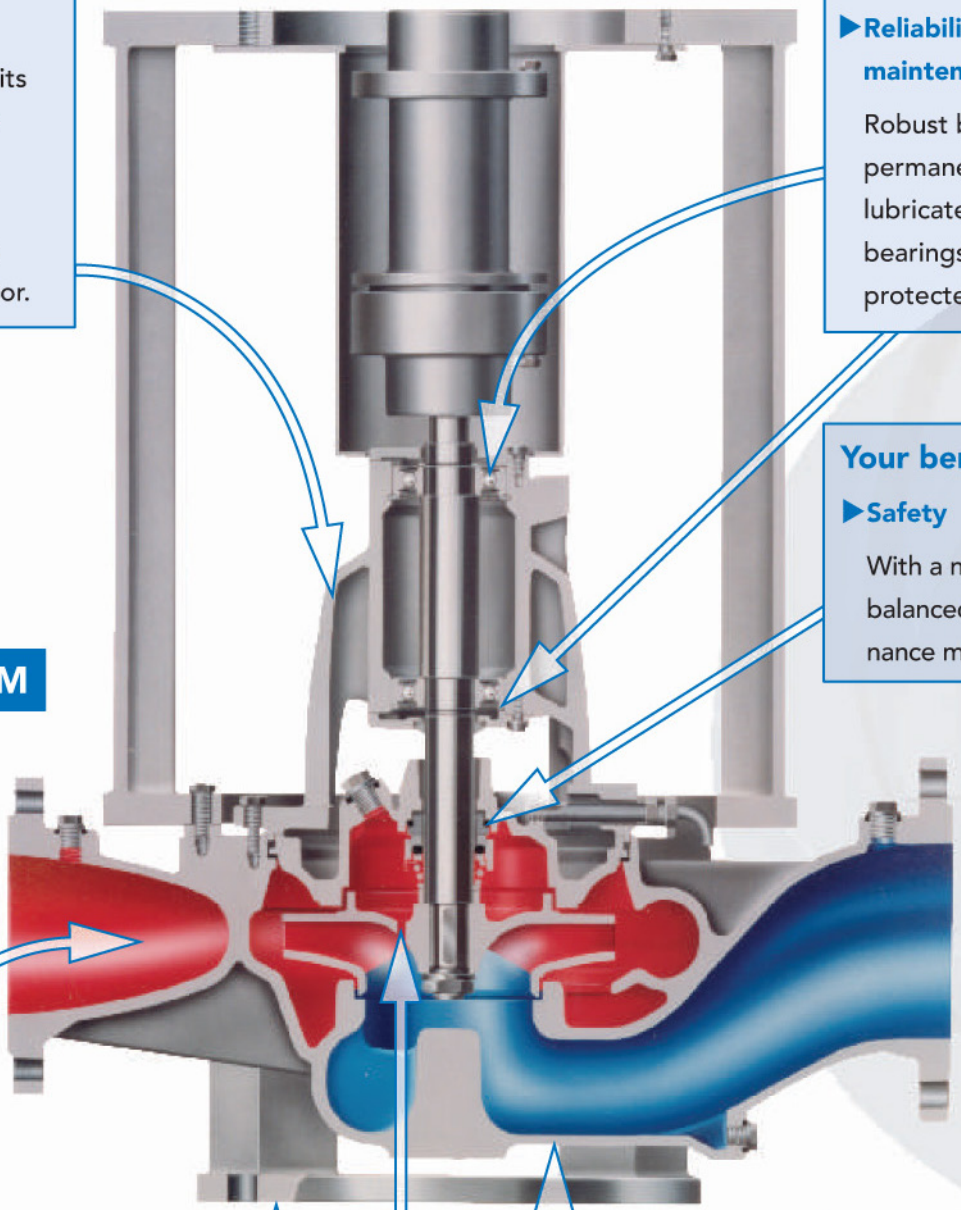

Your benefits:

▶ Flexible installation

Choose vertical installation in base version or wall-mounted installation. Spiral housing with axial inlet or inline variation.

Your benefits:

▶ Stability

Fine balancing of relief bores results in low axial thrust.

Your benefits:

▶ Long service life, resists corrosion

All pump parts that contact sea water are cast from nickel-aluminium-bronze CC333G; other materials optional depending on pumped liquid.

nd Fast Service

Applications:
Ballast and fire-fighting pump, bilge draining, cooling water feed, general service.

The NIM and NAM series are designed to permit removal of the bearing unit without requiring removal of the motor or pump casing. This makes these design types particularly well suited to situations where heavier motors are needed to achieve higher flow rates.

Choose from several different versions to get the unit that is most ideal for your installations. Depending on how your pipes are laid, the amount of space available, and the size of the motor, this will be:

▶NIM series as inline version, or

▶NAM series with axial inlet and radial outlet

All pumps are intended for use with standardised drive motors. Also suitable for larger motors with bearing housing and bracket.

▶Flexible installation

Depending on the series, ALLMARINE® centrifugal pumps are intended for horizontal or vertical installation, for pedestal or wall mounting, or for use as an immersion pump. The shaft seals are by default maintenance-free mechanical seals.

▶Easy ventilation

Pumps that are not self priming can be complemented with manual or automatic venting systems in order to avoid dry running of the shaft seal. When starting, this occurs at specific time intervals; during operation, a pressure switch monitors the need for ventilation. If gas buildup causes pressure to drop while the pump is in operation, the automatic aspirator will switch on to evacuate the system.



vatec® Aspirator

Performance data of ALLMARINE® NIM/NAM

	NIM	NAM	
Q	up to 2,400	up to 2,400	m^3/h
H	up to 100	up to 100	m
p_d	up to 10	up to 10	bar
t	sea water up to 40°C, fresh water up to 140 °C		
Dn_d	80 to 300	65 to 125	mm

TECHNOLOGY

ALLMARINE® NISM/NI/NB: Economical and Versatile

ALLMARINE® NISM provides very good access to all wear parts and a simple const

Your benefits:

▶Compact Design

Space-saving design thanks to assembly with stub shaft.

Your benefits:

▶Reliability and easy maintenance

Driven by standardised motors.

Your benefits:

▶Easy to maintain

Time-saving maintenance due to dismantling of the insert unit without removing the volute casing from the pipe.

ALLMARINE NISM

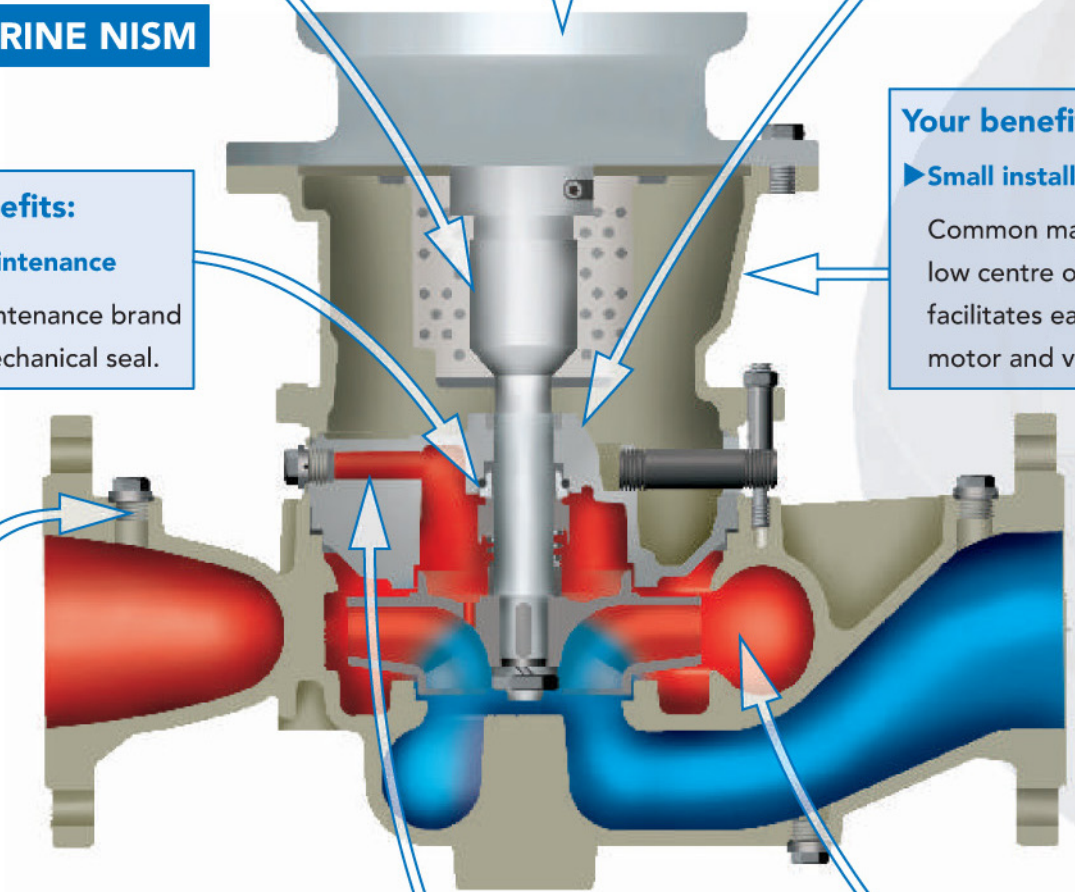

Your benefits:

▶Small installed size

Common marine design with low centre of gravity; bracket facilitates easy connection of motor and volute casing

Your benefits:

▶Easy maintenance

Low-maintenance brand name mechanical seal.

Your benefits:

▶Safety

Pressure measurement connections on suction and discharge flanges; all screws and screw connections with hexagon nut, so always easy to use even with multiple coats of paint.

Your benefits:

▶Safety

Connection piece for automatic aspirator/ventilation a common marine type and easy to access.

Your benefits:

▶Low life cycle costs

High efficiency and low NPSH values thanks to hydraulics that are specially designed and optimised for marine applications.

Water Pumps

ruction with stub shaft.

Applications:
Fire-fighting, bilge, ballast, cooling water, hydro-phore, drinking water and sea water pump.

NI/NB are particularly compact and space saving. So they are always ideal when small flow rates are sufficient or space is very limited. NI, NB and NISM are also available as two-stage pumps in various sizes, which makes them ideal for small flow rates with high delivery head. One and two-stage versions have identical dimensions.

Choose from several different versions to get the unit that is most ideal for your installations. Depending on how your pipes are laid, the amount of space available, and the size of the motor, this will be:

- **NI series in inline version that is installed directly into the pipe**
- **NB series as block version**
- **NISM series for larger motors with higher performance with a foot plate or cast consoles for mounting purposes**

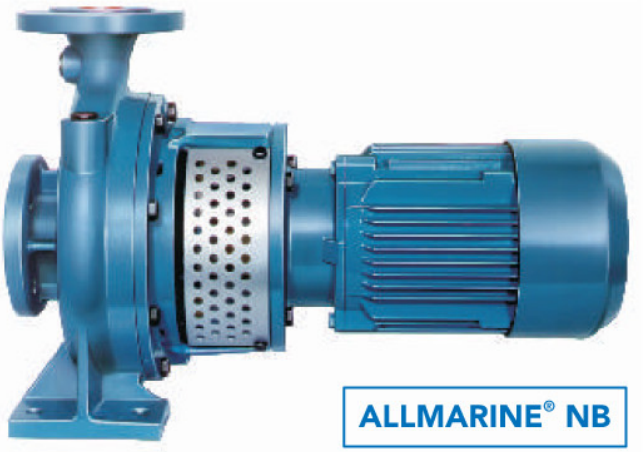

ALLMARINE® NB

All pumps are intended for use with standardised drive motors with a fixed bearing. Power is transferred directly over the pump stub shaft without a coupling. The motor is attached to the pump casing via the bracket.

▶Flexible installation

Depending on the series, horizontal or vertical installation, pedestal or wall mounting and immersion versions. Shaft sealed with packing stuffing boxes or maintenance-free mechanical seals.

▶Easy ventilation

Pumps that are not self priming can be easily complemented with manual or automatic venting systems. Especially on the NISM series, the connection for the venting system is moved to the outside.

Performance data of ALLMARINE® NISM/NI/NB

	NISM	NI	NB	
Q	up to 600	up to 380	up to 480	m^3/h
H	up to 140	up to 145	up to 145	m
p_d	up to 16	up to 16	up to 16	bar
t	see water up to 40 °C, fresh water upt to 140 °C			
Dn_d	40 to 150	25 to 150	25 to 125	mm

TECHNOLOGY

ALLMARINE® NAM-F, L and Sx: The Specialists

These pumps are characterised by special performance characteristics, special desig

Fire fighting pumps of the ALLMARINE® NAM-F series

The high-performance centrifugal pumps of the ALLMARIN® NAM-F series are specially optimised and designed for short-term deployment in fire-fighting systems:

- **Their bearings are protected by a V-ring and designed for a minimum operational life of 1,000 hours without maintenance.**
- **These pumps can be operated at 2,900 or 3,500 revolutions/minute with two-pole standardised motors.**
- **Design provides for connection of an automatic aspirator.**
- **The process design with a removal piece permits removal of the insert unit without further dismantling of the motor or casing.**
- **Alignment of the coupling is no longer necessary because the pump and drive motor are precisely centred in the pump bracket and in the intermediate ring.**
- **Choose vertical installation for pedestal or wall mounting.**
- **Double volute provides for low radial forces with large pump sizes.**
- **Fine balancing with relief bores results in low axial thrust.**
- **High quality, sea water-resistant materials ensure a long service life and operational time.**

ALLMARINE NAM-F



Performance data

	NAM-F	
Q	up to 440	m^3/h
H	80 to 145	m
p_d	up to 16	bar
t	see water up to 40 °C, fresh water up to 90 °C	

n types and an excellent price/performance ratio.

Applications:
Fire-fighting pump, boiler feed pump and hydrophore pump.

TECHNOLOGY

Boiler feed pumps of the L and SRx series

Centrifugal pumps of the L series are characterised by the following:

- **very compact design**
- **high discharge pressure**

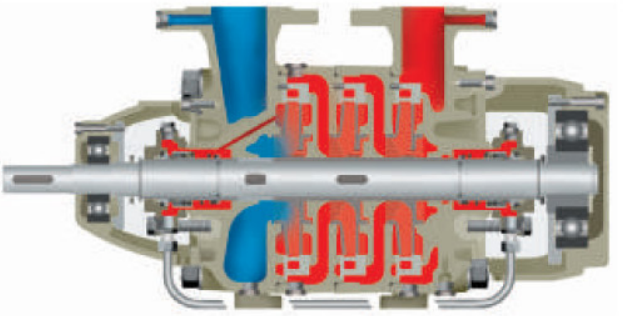

With additional stages, they can also flexibly adapt to different requirements.

Self-priming side channel pumps of the SRx series are good choices as boiler feed pumps whenever you need:

- **small flow rates, but**
- **high delivery head**

Thanks to their open impellers, they can pump even under unfavourable suction conditions and with low admission heights. With a variety of gaskets, materials and a magnetically coupled drive, you can adapt side channel pumps precisely to your installation.

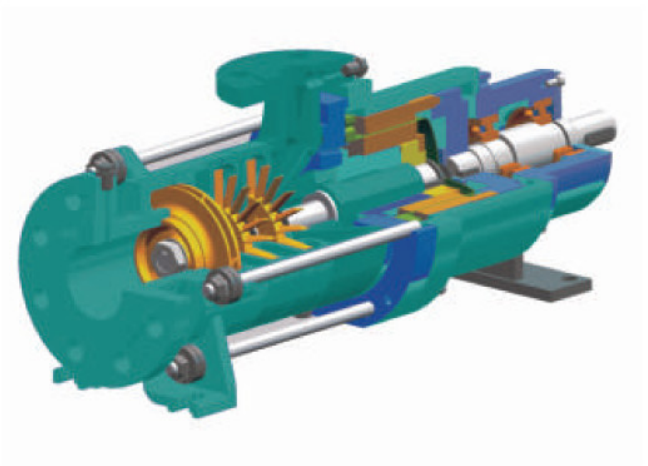

Side-channel pumps

The side-channel stage enables pumps of the SFx and SOx series to reliably move liquids with gaseous or vapour-state components (up to 50 percent), including even slightly boiling liquids like bulk gas. Side-channel pumps are also insensitive to cavitation during variable vapour pressure.

Performance data

	L	SRx	SFx	SOx	
Q	up to 120	7.5 to 35	up to 20	up to 7.5	m^3/h
H	up to 250	240 to 350	up to 260	up to 155	m
p_d	up to 25	25 to 40	up to 25	up to 16	bar
t	up to 160	-40 to 220	-20 up 120	-20 to 120	°C

SN / TRILUB®: Tried and Tested Marine Pumps for All

The family of three-spindle screw pumps for oils of the most varied viscosity.

Your benefits:

▶Low maintenance

Internal bearing lubricated by the pumped liquid or external grease-lubricated bearing.

Your benefits:

▶Flexible

Depending on operational conditions, shaft sealed by shaft seal rings, mechanical seal, or magnetic coupling.

Yout benefist:

▶Wear resistant

Balance pistons on the screws reduce wear and ensure minimal loads on the actuation system by balancing out axial thrust.

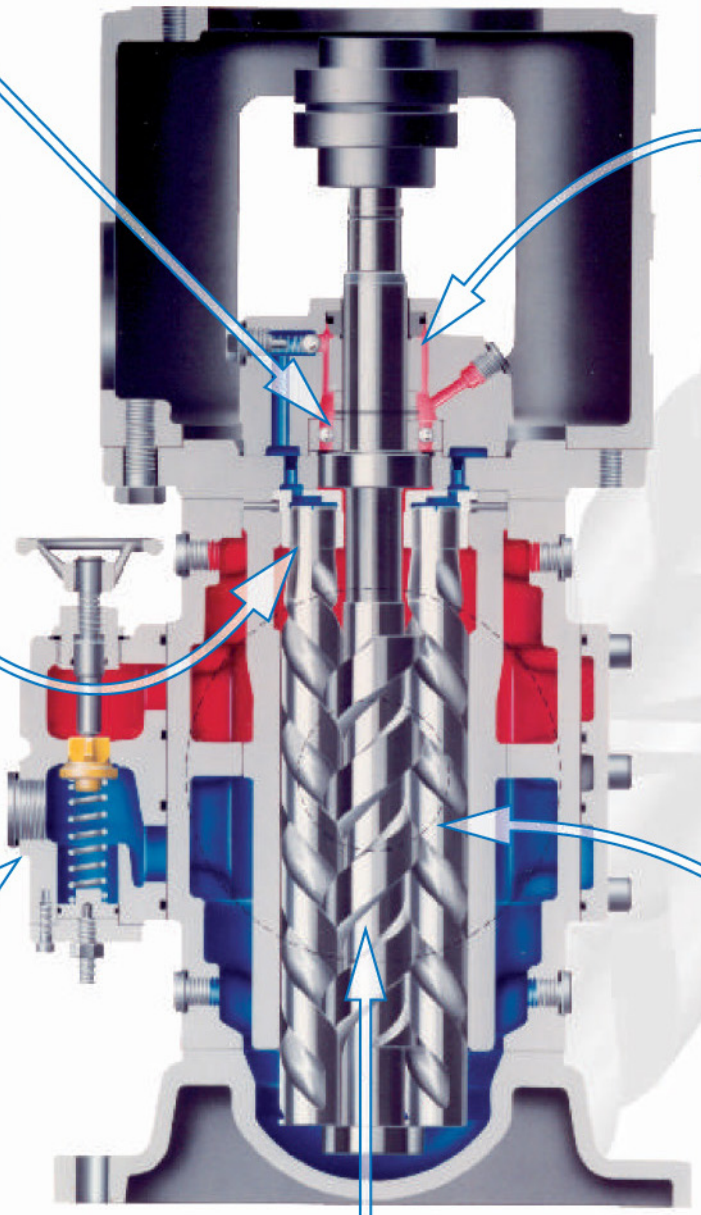

ALLMARINE SN

Your benefits:

▶Safe in operation

Pressure limiting valve can be installed directly as overload protection.

Your benefits:

▶Convenient service

Entire insert unit can be removed without removing casing from the pipe.

Your benefits:

▶Long service life

Hardened and polished spindles; hydraulically-driven idler screws with non-wearing flanks.

Lubricating Media

Applications:
Pumping of heavy and diesel oil, circulation of lubricating and hydraulic oils

The SN series pumps are self-priming. They are supplied for foot mounting, flange mounting, pedestal mounting and as submersion pump or for direct installation in tanks. Choice of shaft seal rings, a mechanical seal, or magnetic coupling for the shaft seal.

All pumps are designed to be driven by standard electric motors.

▶Optimal configuration

A large number of sizes and spindle pitches ensure that the flow rate can be finely graduated across the entire performance range of the series. The benefits are low operational costs with high efficiency and a long running time.

▶Hermetically sealed with a magnetic coupling (SN-M MAGDRIVE®)

Hermetically sealed pumps with magnetic couplings (SN-M) are available for compliance with strict emission restrictions. This guarantees 100 % protection from leaks, oil contamination or odours. Installations with these MAGDRIVE® pumps comply with the requirements of the US Coast Guard and others.

TRILUB series

Three-spindle screw pumps of the TRILUB series are especially well suited for use as transfer and circulation pumps when moving lube and hydraulic oil (MDO without abrasive components). Their simple design makes it easy to maintain these pumps quickly. Especially in shipbuilding, the following TRILUB® design characteristics have proven to be very valuable:

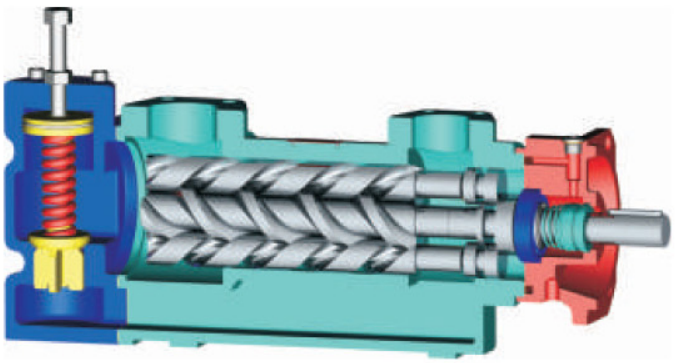

▶Insensitivity to contaminated liquids

▶Durability and economy

▶High availability and not prone to disturbance

Performance data of SN / TRILUB®

	SN	SN-M	TRILUB	
Q	up to 5,300	up to 3,500	11 to 7,500	l/min
p_d	up to 64	up to 64	up to 16	bar
ν	2 to 5,000	2 to 2,000	2 to 1,500	mm^2/s
t	max. 150	max. 250	-20 to 155	°C

TECHNOLOGY

ALLMARINE® MELO and 211 / 216: For Large Volumes

These pumps are characterised by special performance characteristics, unique desi

Your benefits:

▶Rapid assembly

The torsion-proof and flexurally rigid bracket makes fine alignment of the coupling unnecessary. Bracket suitable for standard IEC motors.

Your benefits:

▶Insensitive to external forces

Reinforcements under the attachment flange ensure reliable functionality even when impacts and pressures travel through the hull.

ALLMARINE MELO

Your benefits:

▶Flexibility

Graduated immersion depths for economical tank configurations.

Your benefits:

▶Very long service life

Balancing holes in the impeller reduce axial thrust.

Your benefits:

▶Easy installation

No additional fixation at tank bottom.

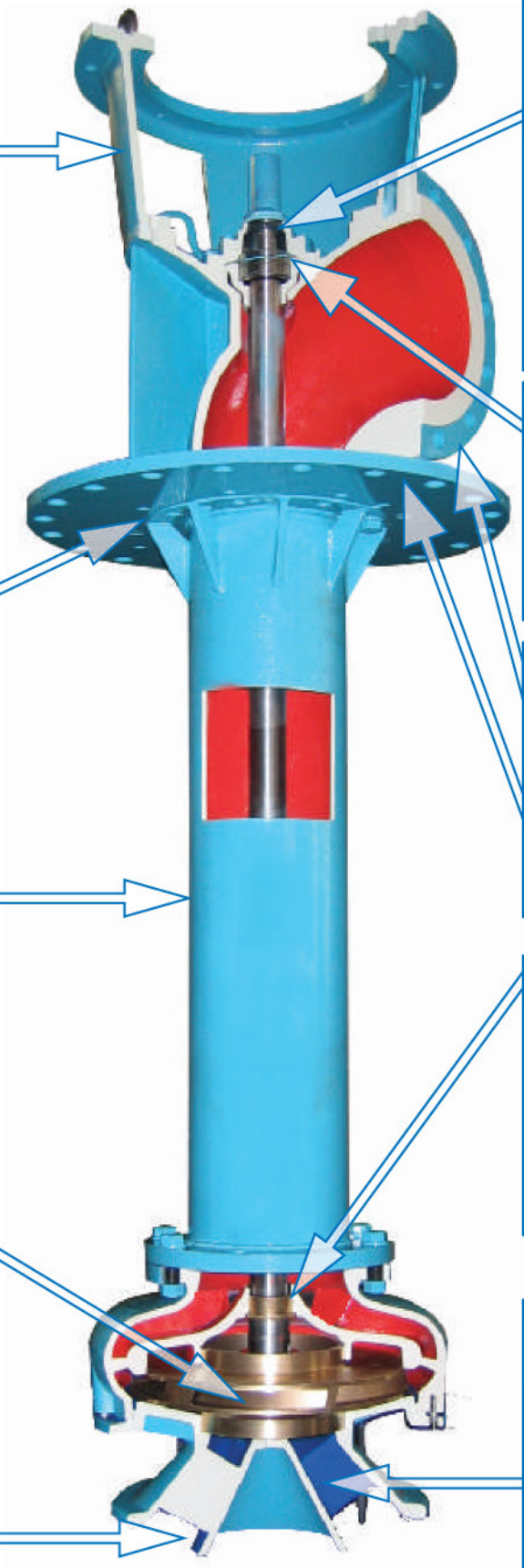

Your benefits:

▶No oil in the water

Shaft seal ring ensures that the shaft is sealed from the atmosphere in the bearing area. A special external V-Ring protects the tank from spray and bilge water, especially when the pump is not running.

Your benefits:

▶Rapid maintenance

Upper bearing in form of easily accessible liquid-lubricated groove ball bearing.

Your benefits:

▶Easy installation

Flange complies with DIN design. Counter flange optional available to be welded on oil tank.

Your benefits:

▶Wear-resistant and economical

Liquid-lubricated plain bearing and exchangeable, hardened shaft sleeve result in a long service life.

Your benefits:

▶Optimised incoming flow

Flow-optimized suction casing with integrated anti-vortex ribs prevents air from entering liquid and optimizes flow inlet.

gn types and an excellent price/performance ratio.

Applications:
Circulation of lubricating oil, main lube oil circuit.

Centrifugal pumps of the MELO (Main Engine Lube Oil) series and the "211" screw pump complement the SN series as

▶**lube oil circulation pumps.**

ALLMARINE® MELO series

MELO is specially designed for lube oil circuits of larger main engines. This pump meets the requirements of leading manufacturers of ship motors. MELO is characterised by the following benefits:

- ▶**Graduated immersion depths (up to 3,100 mm) enable economical tank configuration and optimal usage of the tank's contents without large residual volumes.**
- ▶**The pump can be precisely adapted to the engineering room installation and does not require attachment to the bottom of tank.**
- ▶**The upper bearing is accessible without disassembling the pump, making it easy to maintain. All bearings are liquid-lubricated. A hardened sleeve protects the shaft. This makes wearing parts economical and simple to replace.**

MELO is a particularly good alternative to the 211 series when

▶**high flow rates**

are needed. MELO has an especially attractive price / performance ratio in these cases.

Series 211 / 216

The 211 / 216 series encompasses two-spindle screw pumps. They are the first choice when

▶**high suction pressure**

is required. In these cases, two-spindle screw pumps are also suited for use as cargo and transfer pumps.

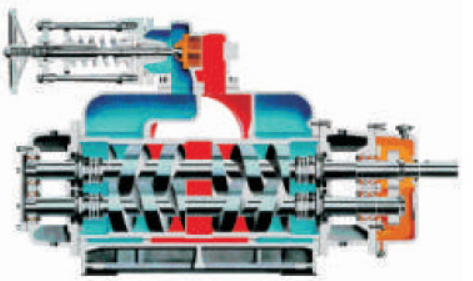

Performance data

	MELO	2xx	
Q	up to 1,600	480 to 1,300	m^3/h
H	up to 155	-	m
p_d	up to 16*	10 to 40	bar
v	-	0.6 to 100,000	mm^2/s
t	up to 100	80 to 400	°C

* Sizes 200, 250 and 300 as two-stage version

TECHNOLOGY

Magnetic Coupling: Ideal for Safely Supplying Fuel at

The SPF-M and SN-M series comply with the highest environmental requirements.

Your benefits:

▶Long service life

Hardened and polished spindles exhibit virtually no wear and extend the service life of the entire pump.

Your benefits:

▶Hermetically sealed

Environmentally friendly and completely emissions free, no mechanical connection between pump and drive; absence of shaft seal saves time and money.

Your benefits:

▶Able to handle high loads

Disturbance-free power transfer even under high operational temperatures (150 °C) and samarium cobalt magnets will not demagnetise when overloaded.

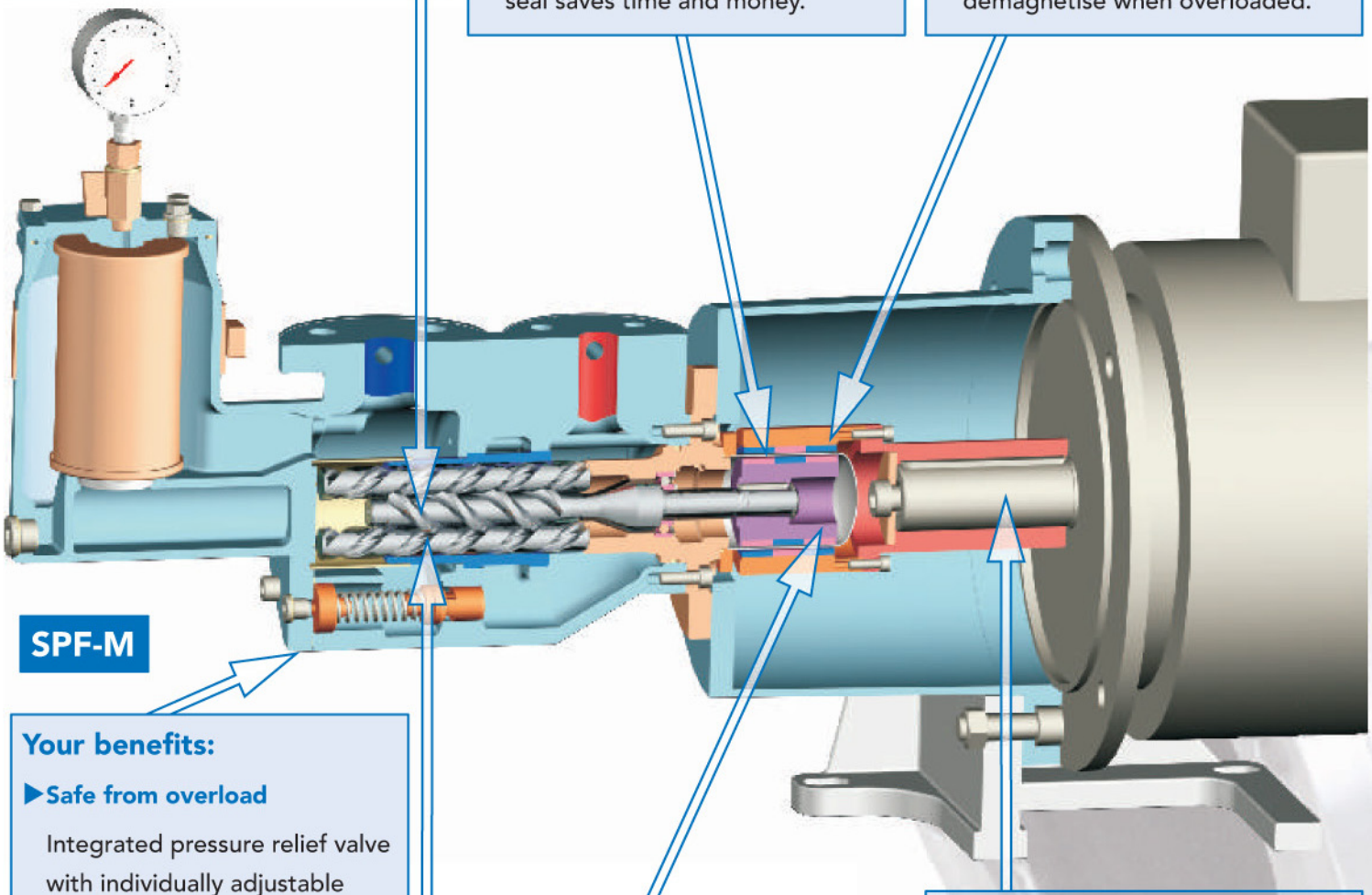

SPF-M

Your benefits:

▶Safe from overload

Integrated pressure relief valve with individually adjustable trigger pressure prevents damage by excessive operational pressure.

Your benefits:

▶Convenient service

Exchangeable casing insert saves time during assembly and service; modular design saves money.

Your benefits:

▶Compact

Direct placement of outer rotor on the motor shaft and directly flanged magnetic coupling save money, weight and space; motor centring provides precise, automatic and lasting alignment.

Your benefits:

▶High availability

Contactless and slip-free torque transfer and forced circulation for cooling of the magnetic coupling greatly extend maintenance intervals and ensure significantly higher MTBF; coupling is highly durable and has nearly limitless running time.

High Temperatures

Applications:
Fuel/diesel oil/lube oil feed (light and heavy oil), hydraulics.

Screw pumps of the SPF-M and SN-M series are the right choice for efficient and reliable pumping of all lubricating liquids. The high quality magnetic coupling ensures a long service life without maintenance. The mechanical seal of conventional pumps is not needed, yet the pump unit operates continuously at up to 100 % capacity without leaks. The engine room stays clean and reduces risk of non-compliance with IMO/US Coast Guard regulations regarding pollution.

The safe choice for fluctuating oil quality and operationally critical systems

You use the version that is ideal for your individual requirements: yet you retain the security of using a standard aggregate proven in thousands of installations. In addition, optional extensions enable you to increase availability and reliability, especially for HFO.

- **Redundant twin units for critical systems (SPZ series)**
- **Optional radial screen filter for long idle times even with contaminated liquids; pressure gauge indicates level of contamination (SPF/SPZ).**
- **Electric heating enables pumping of (cold) heavy oil without difficulty even when temperature fluctuates and after stops.**

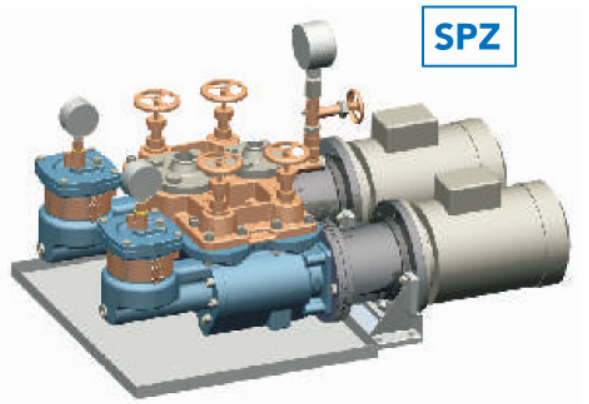

Depending on your application, choose between wall or base attachment and dry, vertical or horizontal installation. SPF, SPZ, and SN may also be installed into the container with conventional shaft seals.

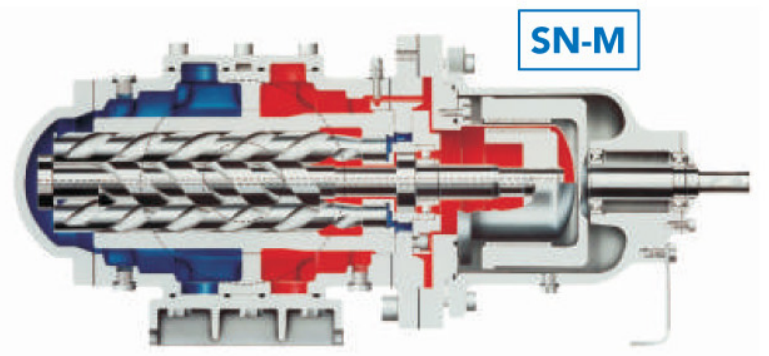

Performance data SPx/SPx-M (MAGDRIVE®)

	SPF/SPZ	SPF-M/SPZ-M	SN-M	
Q	up to 110	up to 110	up to 3,500	l/min
p_d	up to 40	up to 40	up to 64	bar
ν	3 to 750	2 to 750	2 to 2,000	mm^2/s
t	max. 150	max. 150	max. 250	°C

TECHNOLOGY

ALLHEAT®: Some Like it Hot - Pumps for Highest Tem

A special cooling concept guarantees high operational safety and long life even at

Your benefits:

▶Pressure resistant

Casing parts made of ductile cast iron thus ensuring high operational safety.

Your benefits:

▶Stable and able to bear a heavy load

Unrivalled high mechanical robustness and rigidity as a result of optimally arranged reinforcing ribs, large centring diameter and optimised angle.

Your benefits:

▶Low maintenance

Patented oversized seal area to avoid gas-bubble rotation and partial dry running of the mechanical seal.

ALLHEAT

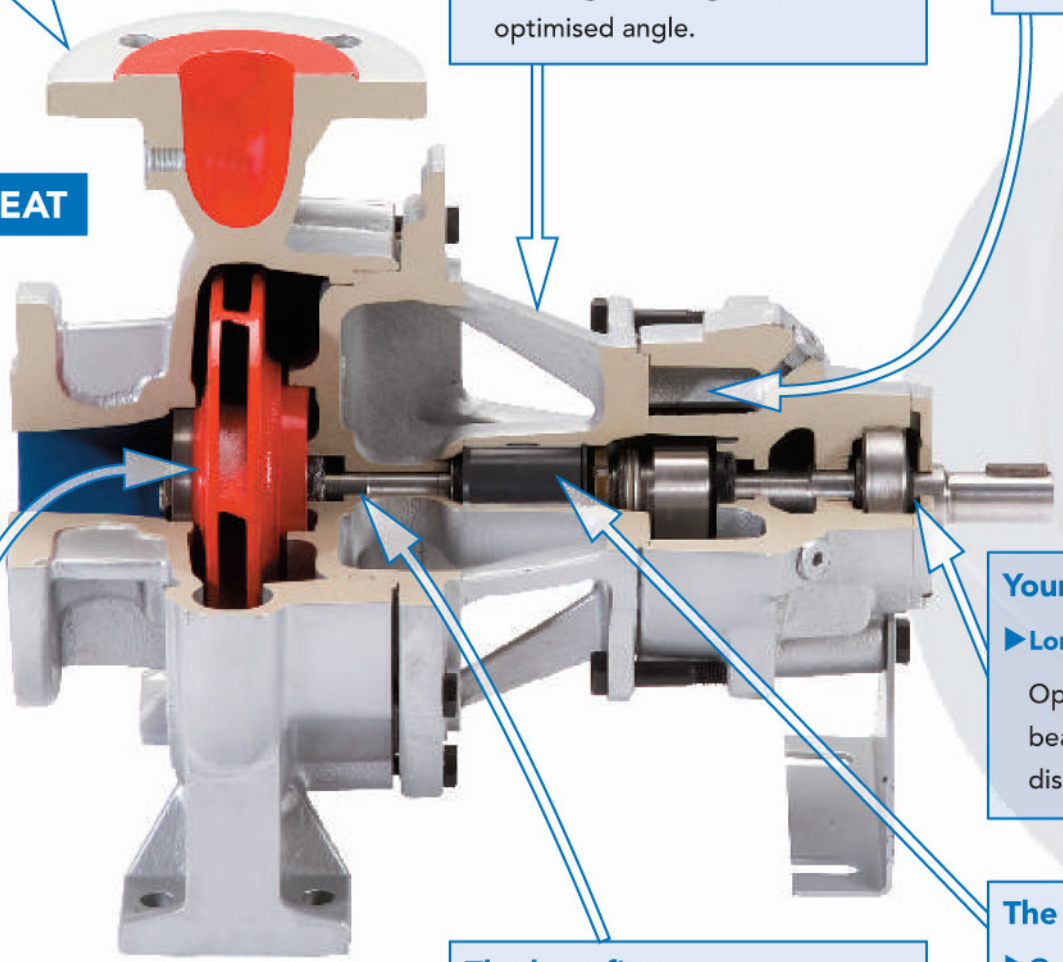

Your benefits:

▶Long life

Optimised antifriction bearing with covering discs and special grease.

The benefits:

▶Operational safety

A very strong plain bearing lubricated by the pumped liquid; protected against dry running, tilting, can be disassembled separately.

The benefits:

▶Flexibility

Bearing-seal combination can be easily upgraded from "All-round" to "Heavy Duty".

Your benefits:

▶Efficient

Hydraulically optimised impellers with very good efficiency factors, low axial thrust on the shaft bearing due to hydraulically relieved impellers.

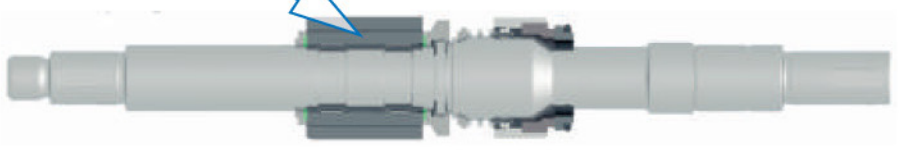

peratures

the highest temperatures.

Applications:
Thermal oil pumping (thermal oil boiler), hot water circulation (steam boiler systems).

Shipyards and ship owners use the ALLHEAT® series when they need a pump designed for high temperature applications. Unrivalled versatility, no external cooling, and extraordinarily durable in continuous operation.

For more than 25 years, thermal oil pumps from ALLWEILER have been successfully used in hundreds of commercial and cruise ships. These pumps move hot water plus mineral-based and synthetic heat-transfer oils with low viscosities. The materials, seals and bearings are specially designed to handle fluctuating temperatures and ambient conditions in addition to mechanical forces common on a ship.

▶Outstanding price/performance ratio, low life cycle costs

These pumps have a very good price/performance ratio because they do not require external cooling. Operational costs are also low: No cooling liquid is required, the entire system loses only small amounts of heat, and maintenance intervals are usually longer than 12 months during continuous operation.

▶High availability

Special design details and continuous technical development of the pump units complement years of experience in shipbuilding to ensure high availability and safety. These pumps are unrivalled in mechanical strength. Both the seals and bearing are cooled efficiently. Durability and service life of the plain bearing are unusually high because the pumped liquid keeps them lubricated without risk of dry running.

▶Safe

Safety gland packing, minimised axial thrust, antifriction bearing with long service life and a double cardanic coupling for special cases make them safe for use in ships even with often critical heat carrier liquids.



ALLHEAT® is installed as a coupling, block or in-line version depending on usage conditions.

Performance data of ALLHEAT®

	NTWH	CTWH	
Q	up to 1,250	up to 1,250	m^3/h
H	up to 100	up to 100	m
p_d	up to 16	up to 25	bar
t	max. 207 (hot water), max. 350 (Oil)		°C

TECHNOLOGY

TECFLOW®: Compact and 100 % More Delivery Capa

An innovative pump with 2/3-lobed pumping elements and extensive industry experi

The benefits:

▶Highly wear resistant

Ample mechanical-seal housing provides good flushing for SiC/SiC mechanical seal.

The benefits:

▶Flexible installation

Suction casing designed for optimised flow. Suction branch can be rotated by 90°.

The benefits:

▶Long maintenance intervals

Robust pin joint with exchangeable, hardened bushes and pins, encapsulated against gases and liquids with joint collars and joint clamps.

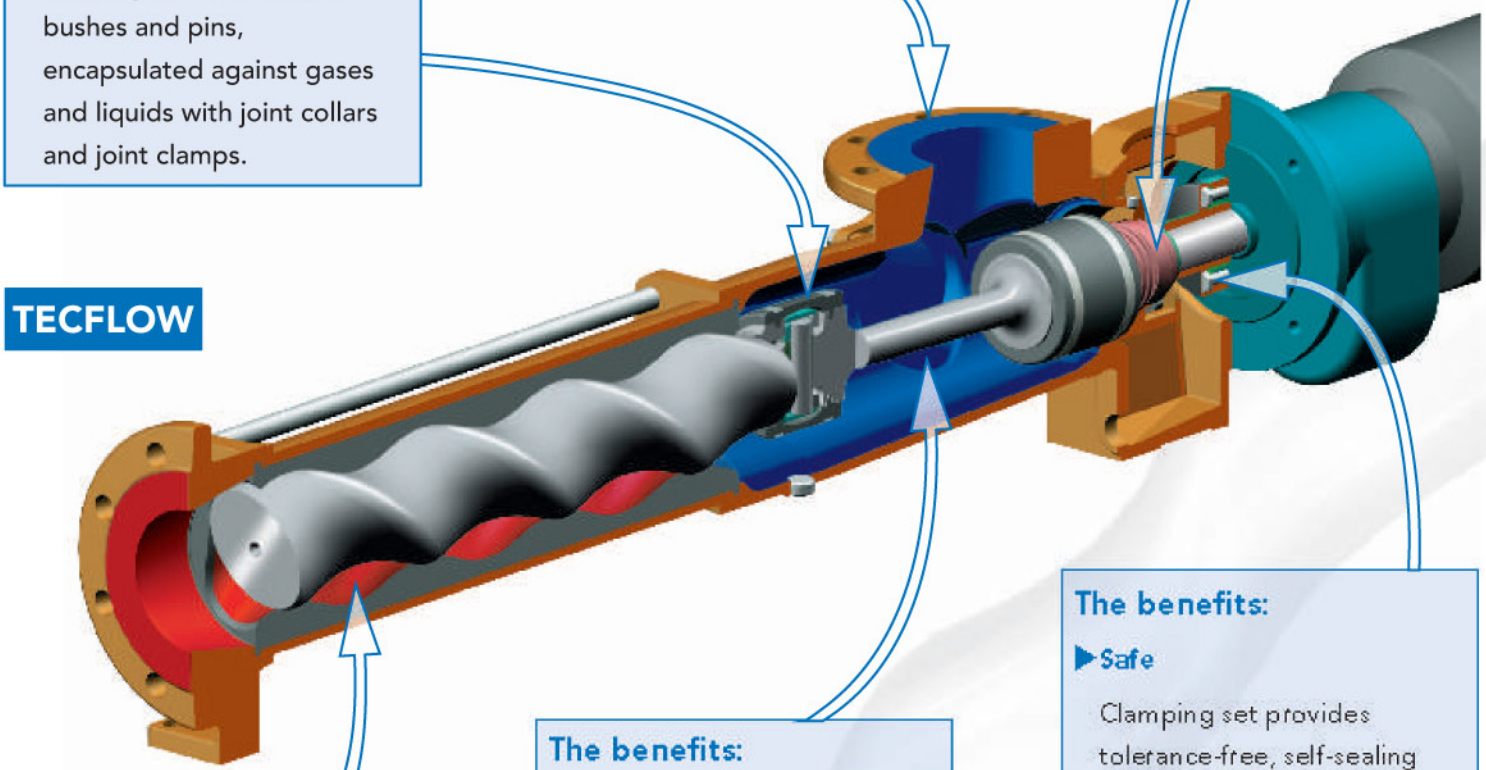

The benefits:

▶Safe

Clamping set provides tolerance-free, self-sealing plug-in shaft.

The benefits:

▶Rapid cleaning

Cleaning openings offset on the suction casing. This makes both pin joints easily accessible.

The benefits:

▶Uniform flow

Gentle, low-pulsation pumping due to uniform chamber volumes. Despite rotation of the rotor, no turbulence results.

city

ence.

Applications:
Bilge draining, general sludge pump; for liquids with solids and fibres.

The new TECFLOW® series is a progressing cavity pump that was designed especially for sludge, wastewater and faecal matter. This pump will be your first choice when you have to move liquids that contain fibres and solids with up to ten percent dry substances. The TECFLOW® series reflects our experience in employing progressing cavity pumps in industrial wastewater-pumping applications on ships or offshore installations. TECFLOW® embodies decades of experience with industrial pumps and is specially optimised for these tasks. With this pump in your system, you will have a marine pump with a very favourable price/performance ratio that does not require you to accept compromises.

High pumping capacities

The new 2/3-lobed pumping elements generate significantly greater power density than the 1/2-lobed pumping elements and generate approximately twice as much flow volume at the same speed.

Optimised for use in ships:

- **High pump availability through the use of components that have already proven themselves countless times in practical industrial applications.**
- **Small shaft seal diameter for lower sliding speed and friction, shaft-seal area easily accessible.**
- **Low NPSH values and stable performance curve**
- **Short, space-saving block-type design**
- **Very high efficiency with three pumping chambers and uniform elastomer wall thickness.**
- **Self-priming and reversible pumping**

Depending on your application, choose a progressing cavity pump in a block version (motor attached directly to pump via flange or bracket); with base attachment; dry, vertical or horizontal installation. If the TECFLOW® series does not have adequate performance in some areas, select a pump from a different series.

Performance data of Progressive Cavity Pumps

	TECFLOW®	Progressive Cavity Pumps	
Q	up to 3,100	up to 4,850	l/min
p_d	up to 16	up to 24	bar
p_{diff}	up to 4	up to 16	bar
ν	up to 200,000	up to 270,000	mm^2/s
t	max. 40	max. 150	°C

TECHNOLOGY

ALLTRIMM®: Install into the Pipe Direct, Saving Use of

ALLTRIMM® (patent pending) brings together decades of experience, special mate

The benefits:

▶Long service life

Permanently lubricated, robust antifriction bearings.

The benefits:

▶Reliability

The electric motor is built from proven standardised parts from a large German manufacturer. The pumped liquid flows through the motor casing, ensuring optimal cooling even without ventilators.

The benefits:

▶High performance

Impeller optimised for pressure and NPSH with uniform reversible pumping performance.

ALLTRIMM

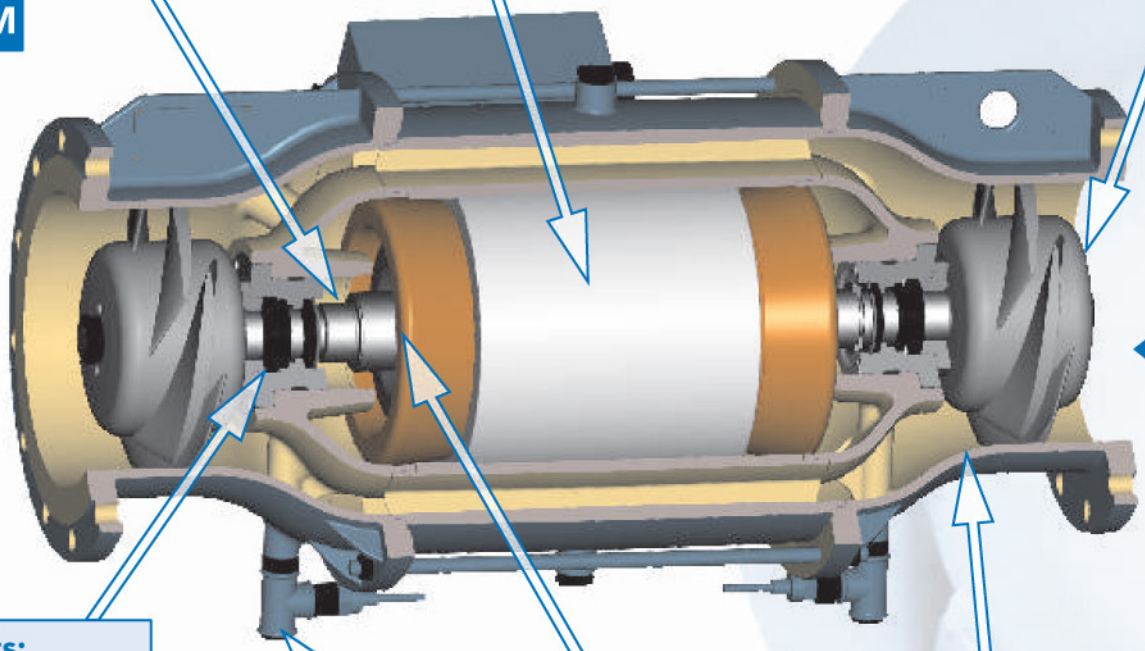

Efficient reversible hydraulics

Efficient reversible hydraulics

The benefits:

▶Economical

Coated shaft sleeve and the combination of NBR and PTFE shaft seal rings extend maintenance intervals.

The benefits:

▶Safe

Integrated leak sensor provides for continuous monitoring.

The benefits:

▶Corrosion resistant

Pressure-proof housing made of special sea water resistant aluminium bronze. Flange according to DIN EN 1092-2 PN 10.

The benefits:

▶Rapid reactions

Short starting times due to the non-coupling design with only one shaft and unusually few rotating parts and masses. Therefore low-load reversal of flow direction.

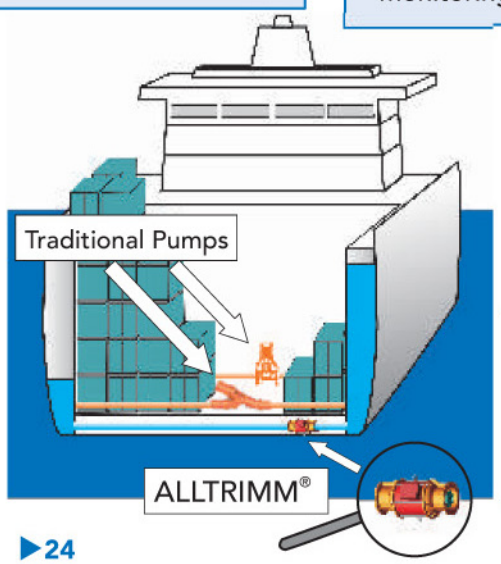

▶Space saving

due to integrated motor and installation without foundation.

Base and Space in General

rials and the latest technology.

Application:
Anti-heeling pump with very low space requirement, liquid-cooled, and monitored.

ALLTRIMM® pumps are designed with modern technologies. They ensure high MTBF and low lifecycle costs. As a result you can feel confident that your pump units are both safe and economical. You invest only exactly the amount necessary for reliable functionality.

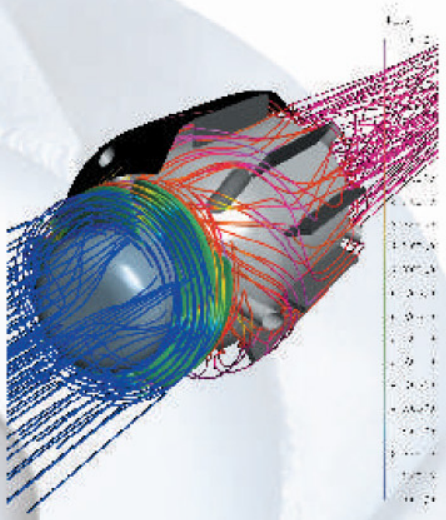

▶Flow optimisation brings high levels of efficiency

Numerical CFD calculation methods optimise pressure and NPSH by improving flow in and around the impeller and pump casing. Guide profiles ("swirl regulators") integrated into the motor casing guarantee excellent axial flow leading up to the optional second stage.

▶Mass optimisation makes the unit light and robust

FEM calculations make sure that all components are optimised for weight and pressure.

The material thickness corresponds at least to the respective maximum pressure loads.

▶Compact and space saving

With the drive integrated into the pump and the absence of additional valves and pipes, ALLTRIMM® needs less room than conventionally designed anti-heeling systems.

▶Double safety

All gaskets are made of high-strength PTFE and have successfully passed long-term tests. A specially developed leak monitoring system provides additional safety. It monitors the area between the second and third seal rings and permits rapid reaction when a leak is just starting.



Performance data of ALLTRIMM®

Q	up to 1,300	m^3/h
H	up to 20	m
p_d	up to 2.5	bar
t	sea water up to 40	°C

TECHNOLOGY

ALLWEILER - The right pump for every application



Founded in 1860, ALLWEILER AG is the oldest German pump manufacturer and the European market and technology leader for centrifugal, propeller, screw, progressing cavity, macerator, gear, and peristaltic pumps. ALLWEILER AG is represented by distributors and salescompanies in European countries as well as in Egypt and South Africa. Around the world, the company has approximately 100 subsidiaries and partner companies.

ALLWEILER pumps are designed to meet the requirements in specific fields of use. These include especially marine and offshore, water and wastewater, power generation, process technology and chemistry, food and pharmaceutical, building industry, machine tool, pulp and paper, heat transfer, bioenergy and oil and gas.

Our experience since 1860 is your guarantee. As a member of the Colfax Corp., we benefit from international know-how in development, design and production. By choosing ALLWEILER, the customer chooses not only a product of high quality and value, but also a manufacturer that offers competent, rapid and cooperation consultation.

Our global sales and service network ensures competent partners around the clock.

Contact us soon.

Tel. +49 (0)7732 86-0

Fax +49 (0)7732 86-436

Office Hamburg

Tel. +49 (0)4542 85 690 52, +49 (0)4542 85 690 53

E-mail: ro.dubberstein@allweiler.de

E-mail: r.markus@allweiler.de

ALLMARINE® Information Request Form

Please make a copy of this form and fax it to

ALLWEILER AG
D-78315 Radolfzell

Fax +49 (0)7732 86-436

Or simply call or send us an E-mail. We look forward to hearing from you.

Tel. +49 (0)7732 86-0

E-mail allmarine@allweiler.de

Please provide me free information at no obligation about **(please check)**:

- ☐ **ALLMARINE® MI/MA**
- ☐ **ALLMARINE® NI/NB/NIM/NAM/NISM**
- ☐ **SN/TRILUB®**
- ☐ **ALLMARINE® NAM-F**
- ☐ **SPF/SPF-M**
- ☐ **ALLMARINE® MELO**
- ☐ **L**
- ☐ **ALLHEAT®**
- ☐ **211**
- ☐ **TECFLOW®**
- ☐ **ALLTRIMM®**
- ☐ **Sx**
- ☐ **Entire product range of ALLWEILER AG**

Address

.....
Company

.....
Industry

.....
Contact person

.....
Street

.....
Postal code/City/Country

.....
Telephone

.....
Fax

.....
E-mail

INFO-FAX

ALLWEILER – weltweit präsent
ALLWEILER – global presence

Werke in Deutschland
Plants in Germany

ALLWEILER AG
Schraubenspindelpumpen, Kreiselpumpen, Zahnradpumpen, Propellerpumpen und Anlagen
Screw Pumps, Centrifugal Pumps, Gear Pumps, Propeller Pumps and Systems

Postfach 11 40
78301 Radolfzell
Allweilerstraße 1
78315 Radolfzell
Germany
Tel. +49 (0)7732 86-0
Fax +49 (0)7732 86-436
E-mail: service@allweiler.de
Internet: http://www.allweiler.com

ALLWEILER AG
Exzenterschneckenpumpen, Schlauchpumpen, Kreiskolbenpumpen und Mazeratoren
Progressing Cavity Pumps, Peristaltic Pumps, Rotary Lobe Pumps and Macerators

Postfach 20 01 23
46223 Bottrop
Kirchhellener Ring 77–79
46244 Bottrop
Germany
Tel. +49 (0)2045 966-60
Fax +49 (0)2045 966-679
E-mail: service@allweiler.de
Internet: http://www.allweiler.com

Die Anschriften der ALLWEILER Vertretungen weltweit finden Sie unter http://www.allweiler.com.
The current addresses of ALLWEILER representatives are listed at http://www.allweiler.com.



ALLWEILER AG
Postfach 11 40
78301 Radolfzell • Germany
Tel. +49 (0)7732 86-0
Fax +49 (0)7732 86-436
E-mail: service@allweiler.de
Internet: http://www.allweiler.com

ALLWEILER
A Colfax Business Unit

GB/05.09 – Ident-Nr. 796 481